Parts List
(115V, 1PH, 60HZ)
Model DF-200

1. Belt 58888
2. Pulley 10212
3. Belt Idler 103249
4. Pulley 10208
5. Torque Idler 104973
6. Mix Pan and Evaporator
   Top Cover Assy. 110045
7. Cushion 104648
8. Torque Spring 64504
9. Idler Spring 64515
10. Carb Tube 109667
11. Carb Tube O-Ring (2) 58947
12. Drip Chute 105406
    Drip Chute Hanger 110096
13. Bearing & Shaft 2858
    Bearing Cap 109270
14. Back Panel 109537
15. Motor Gasket 102427
16. Wire Box Assy (See Below)
17. Wiring Box Cover 109539
    Power Cable 61266
18. Condensing Base 75822
19. Fan Motor 75595
    Fan Blade 75365
20. Motor Support 110011
21. Dasher Motor 75272
22. Compressor 75827
    Start Capacitor 76475
    Current Relay 76477
    Compressor Overload 76476
23. Motor Saddle 104267
24. Leg (4) 64135
25. Mix Pan Lid 65997
26. Spigot Housing Cover 105532-02
27. Side Panel (2) 108526
28. Logo 16039
29. Spigot Plunger 109939
30. Plunger O-Ring (2) 58923
31. Front Plate 65631
32. Spigot Handle 65632-01
33. Front Plate Knob (2) 64065
34. Faspin 64255
35. Front Plate O-Ring 58911
36. Spigot Switch 70008
    Spigot Switch Plunger 105529
    Spring 105684
    Housing Assy 105526-01
    Switch Bracket 105530
37. Front Plate Stud (2) 7107
38. Switch 70023
    Switch Decal 9510
39. Front Panel 109534
40. Drip Tray Support 108976
    Drip Tray 108867
    Drip Tray Insert 108868
41. Dasher O-Ring 58903
42. Rear Seal 108541
43. Dasher 104991
44. Stator Rod 105531
45. Scraper Blade 104984-02
46. Mixout Plug 65445

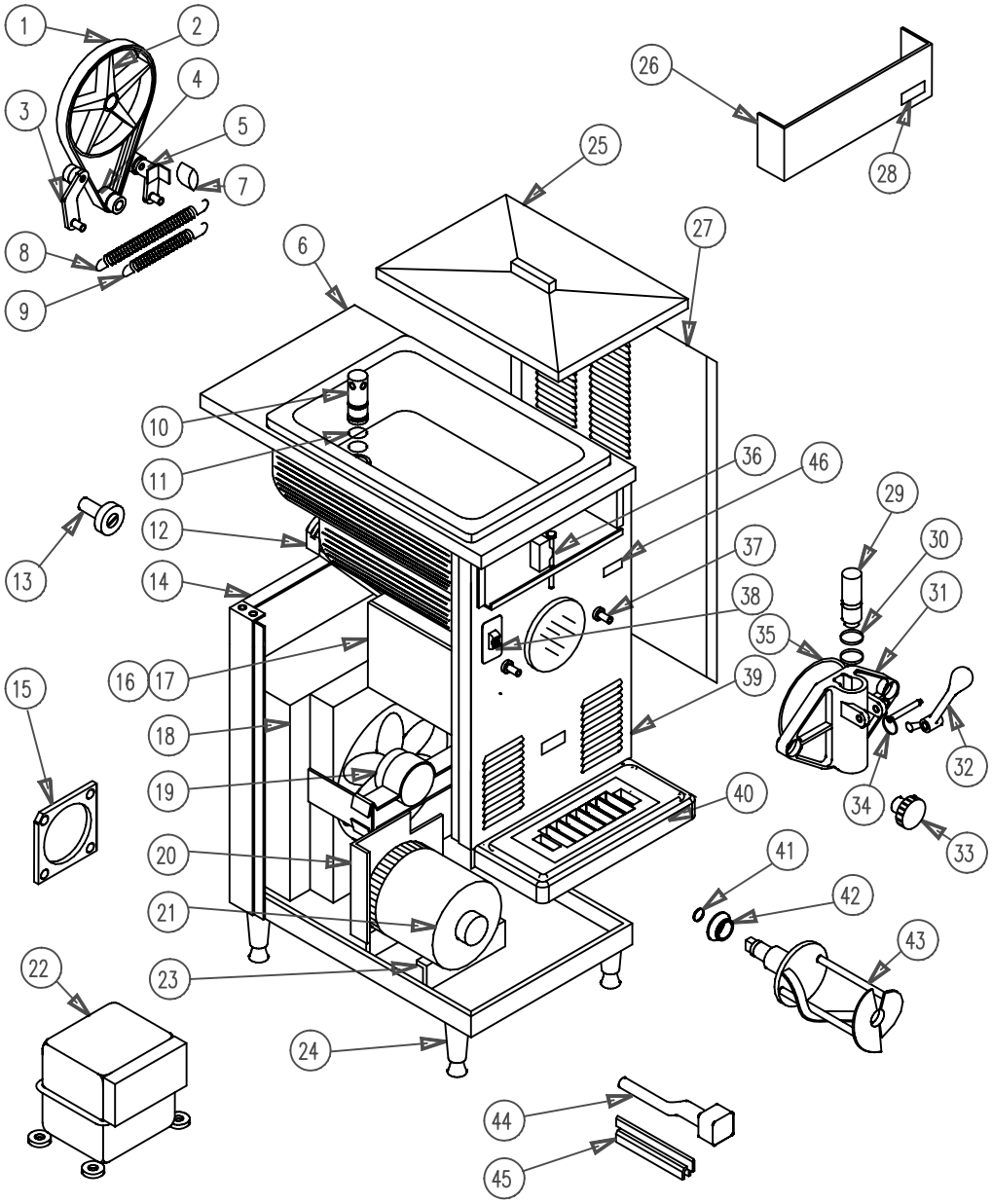

Refrigeration Parts

Access Valve, 1/4" 71046
Access Valve, 3/8" 71021
Drier K00157
Expansion Valve 71035
High Pressure Switch 71090

181053

SaniServ	Model DF-200	BOM 4050010	
	Description 115V, 1PH, 60Hz	File 181053D.DWG	
Exploded View	Wiring Box 15855	ECN 1826	Date 2/24/10
	Wiring Dia. 81395	Sheet 1 of 1	

D